Goodwind

GW-Y688

YUCHAI-Diesel Generator Set

Standards： CE： 2006/42/EC Machinery safety， ISO 9001, ISO 14001, ISO 45001, GB/T 2820.5, ISO 8528

Conditions： Reference environmental conditions according to the ISO 8528-1:2018 standard: Atmospheric pressure 100 KPa, ambient temperature 25°C, relative humidity 30%.

PRP: According to ISO 8528-1:2018, prime power refers to the generator set under agreed operating conditions and maintained in accordance with the manufacturer's specifications. The generator set is used in variable load applications and has no running hour limit throughout the year. The average allowable output power for 24 hours of continuous operation shall not exceed 75% of the rated power.

ESP： According to ISO 8528-1:2018, emergency power refers to application when the grid power is outage, or application under test conditions, and the annual running time does not exceed 200 hours. The average allowable output power for 24 hours of continuous operation shall not exceed 75% of the standby rated power.

GENERATOR SPECIFICATION

ITEMS	PRP	ESP
Power	625KVA	688KVA
Power	500kW	550kW
Frequency/Phase/RPM	50Hz / 3P / 1500	
Standard voltage	400/230V	
Available voltage	380/220V to 415/240V	

Water-cooled | Three Phase | 50 Hz | Diesel

GENERAL INSTALLATION

ITEMS	OPEN	SILENT
Dimension(L*W*H)(mm)	3650*1500*1900	4500*1700*2450
Weight(kg)	4000	5200
Fuel tank(L)	-	800
Sound pressure level		
@75%load @1m db		88
@75%load @7m db		75

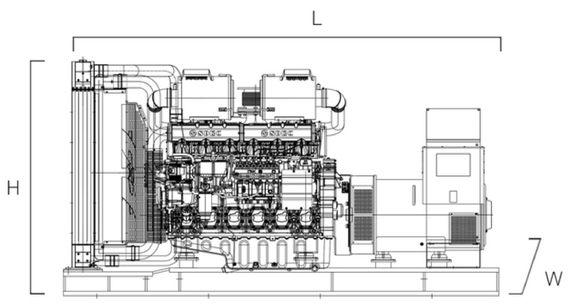

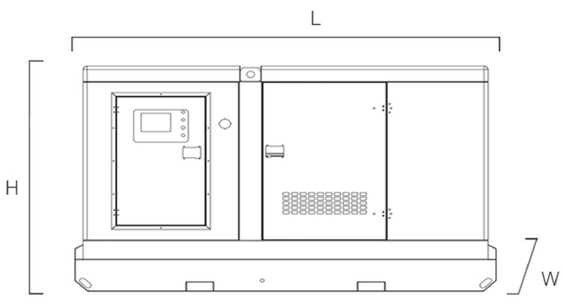

NOTE：Weights and dimensions based on standard products. According to 2000/14/CE , sound data is provided at 7m for 75% prime power. For Actual installation,please contact the manufacturer.

PERFORMANCE DATA

Engine brand		YUCHAI
Fuel		Diesel
Aspiration		Turbo charged
Cooling		Water-cooled
Governor		Electric
Displacement		19.6L
Application		Prime&Standby
Fuel consumption	100%ESP(L/H)	221.9
	100%PRP(L/H)	199.1
	75%PRP (L/H)	157.4
	50%PRP (L/H)	108.4

Goodwind

GW-Y688

YUCHAI-Diesel Generator Set

ENGINE SPECIFICATION

Performance Data	
Engine brand	YUCHAI
Engine model	YC6TD840-D31
Engine power	561/616KW
Cylinder arrangement	6 in line
Bore and stroke	152X180mm
Compression ratio	14:1
Rated speed	1500rpm
Engine type	4-stroke diesel

Exhaust System	
Max.exhaust backpressure	4kPa
250 mmInner diameter of exhaust port.	168 mm

Fuel system	
Injection system	Electronic unit pump
Governor	Electronically-controlled

Cooling system	
Total coolant capacity	130.5 L
Engine coolant capacity	47L
Radiator coolant capacity	76.5L
Engine max.outlet coolant temperature	97°C

Electrical System	
Charging generator	28V*55A
Starting motor	24V*7.5kW
Battery Voltage	24V
Battery Capacity	200AH

Air Intake System	
Air Filter	Dry paper element
Clean air cleaner	3.5 kPa
Dirty air cleaner	5 kPa

ALTERNATOR SPECIFICATION

Basic data	
Insulation & temperature rise	Class H / H
Excitation type	Self-excited
Winding leads	12
Winding connections (standard)	Star
Winding pitch	Two thirds
Number of phase	Three phase

ALTERNATOR SPECIFICATION

Basic data	
Type	Brushless
No.of bearings	Single
Coupling system	Flexible disc
Maximum over speed	2250RPM
Coating type	Vacuum impregnation
IP rating	IP23

Goodwind

GW-Y688

YUCHAI-Diesel Generator Set

GENSET VERSION

Standard features

- Diesel engine,50 degrees radiator, brushless alternator
- Intelligent controller
- Output circuit breaker(up to1250A)
- Maintenance-free start battery, battery charge, battery switch
- Steel industrial; silencer, exhaust bellows and elbows
- Steel chasis and anti-vibration shock absorbers
- Lifting and moving structure, expansion of oil and coolant discharge
- Moving parts protection, hot parts protection
- Special toolbox,delivery attached documentation

Optiona Featuresl

ENGINE	● Water jacket preheater ● Oil Preheater, oil level maintainer,oil manual pump ● Heavy air filtration ● Residential silencer ● Remote radiator, heat exchanger
ALTERNATOR	● PMG/AREP excitation system ● Anti-condensation heater ● Winding/bearing RTD ● Double bearing structure ● IP44 protection class
CONTROL SYSTEM	● Synchronizing panel, remote control panel ● RS232/485,4G & GPS wireless, ethernet communication card ● Additional digital / analog input/output ● Monitoring software, mobile APP ● Ni-Cad batteries
GENERATING SET	● External fuel tank automatic fuel feeding ● ATS/output/combining/distribution cabinet ● Load test cabinet ● Mobile trailer ● Customized design

Ideal for...

Goodwind

GW-Y688

YUCHAI-Diesel Generator Set

CONTROL SYSTEM
KEY FEATURES

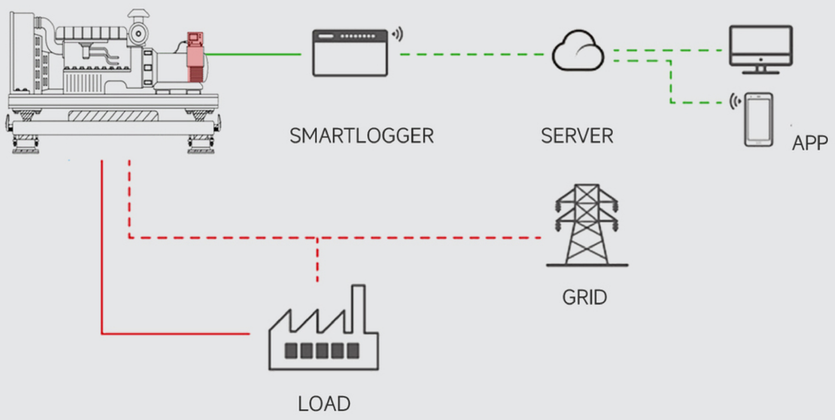

Single generator set control-ler can be used in prime or standby scenarios

Manual and remote start,MRS application

Auto mains faiure,AMF application

Genset power/frequency/fac-tor/voltage/current detection

Engine/alternator /generator protections/emergency stop

Event log /running hours history / maintenance warning,LCD screen

User access management, software and tools are easy to use

Input or output configuration, USB communication port

+86 514 86827306

info@goodwindpower.com

www.goodwindpower.com